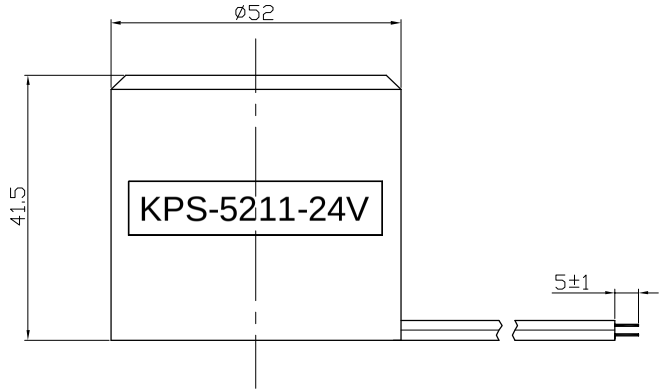

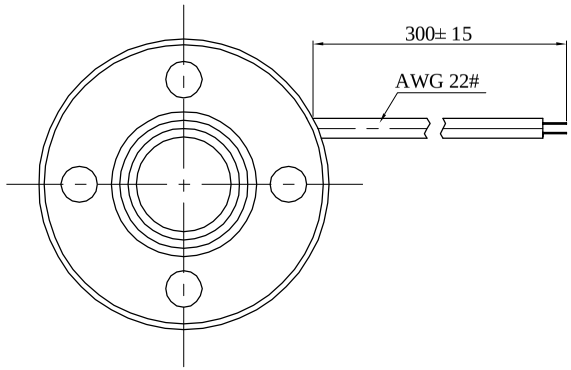

SPECIFICATION

1.Rated Voltage 24VDC
2.Operating Voltage .....12~24VDC
3.Max.Rated Current ..... 200mA at 24VDC
4.Tone Nature ..... Siren
5.Min.Sound Pressure Level 105dB/100cm/24VDC
6.Case Material/Color .....ABS/Black
7.Operating Temperature ..... -20~+60 ℃
8.Store Temperature .....-30~+70 ℃
9.Wires Connection .....Red +12V
.....Black GND
10.Weight 80g

No.	DESCRIPTION	APPROVED	DATE

TOLERANCES UNLESS NOTED OTHERWISE
.X ±
.XX ±
.XXX ±
90° FORMED ANGLES +2° -1°
FIRST ANGLE PROJECTION

APPROVALS	DATE
DRAWN	
CHECKED	
APPROVED	05.12.09

KEPO NINGBO KEPO ELECTRONIC CO.,LTD
http://www.chinaacoustic.com

Piezo siren QUARTZ-1 LTD
KPS-5211-24V-1894

UNIT mm | DWG NO. OEM1894
SCALE NOT TO SCALE | SHEET | VER 1.0