SPECIFICATION

1. SCOPE

This specification is applied to the piezo-element.

2. SPECIFICATION (at25℃)

2.1 Resonant Frequency	:	3.1～3.8 KHz
2.2 Resonant Resistace	:	300 Ω max
2.3 Capacitance	:	25000 pF± 30% at 100Hz
2.4 Input Voltage	:	30 Vp-p max
2.5 Operating Temperature	:	-20~+60℃
2.6 Storage Temperature	:	-20~+70℃
3. DIMENSION	:	as per figure

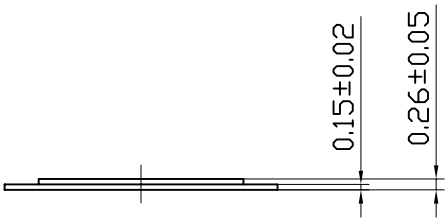

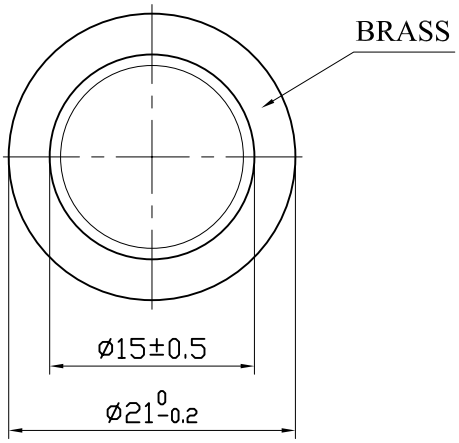

TOLERANCES UNLESS NOTED OTHERWISE .X ± .XX ± .XXX ± 90° FORMED +2° ANGLES -1°	DRAWN		KEPO MODEL NO.	CUSTOMER			
	DESIGN		MFT-21T-3.4A1				
	CHECKED			CUSTOMER NO.			
	APPROVED		DWG NO.				
	DATE	05.09.26	KP3.845.781	VER	1.0	SCALE	
	CONTRACT NO.			UNIT	mm	SHEET	
FIRST ANGLE PROJECTION	AGENCY APPROVAL		KEPO CO.,LTD.	TEL:(+86)574-88370330 FAX:(+86)574-88370329			