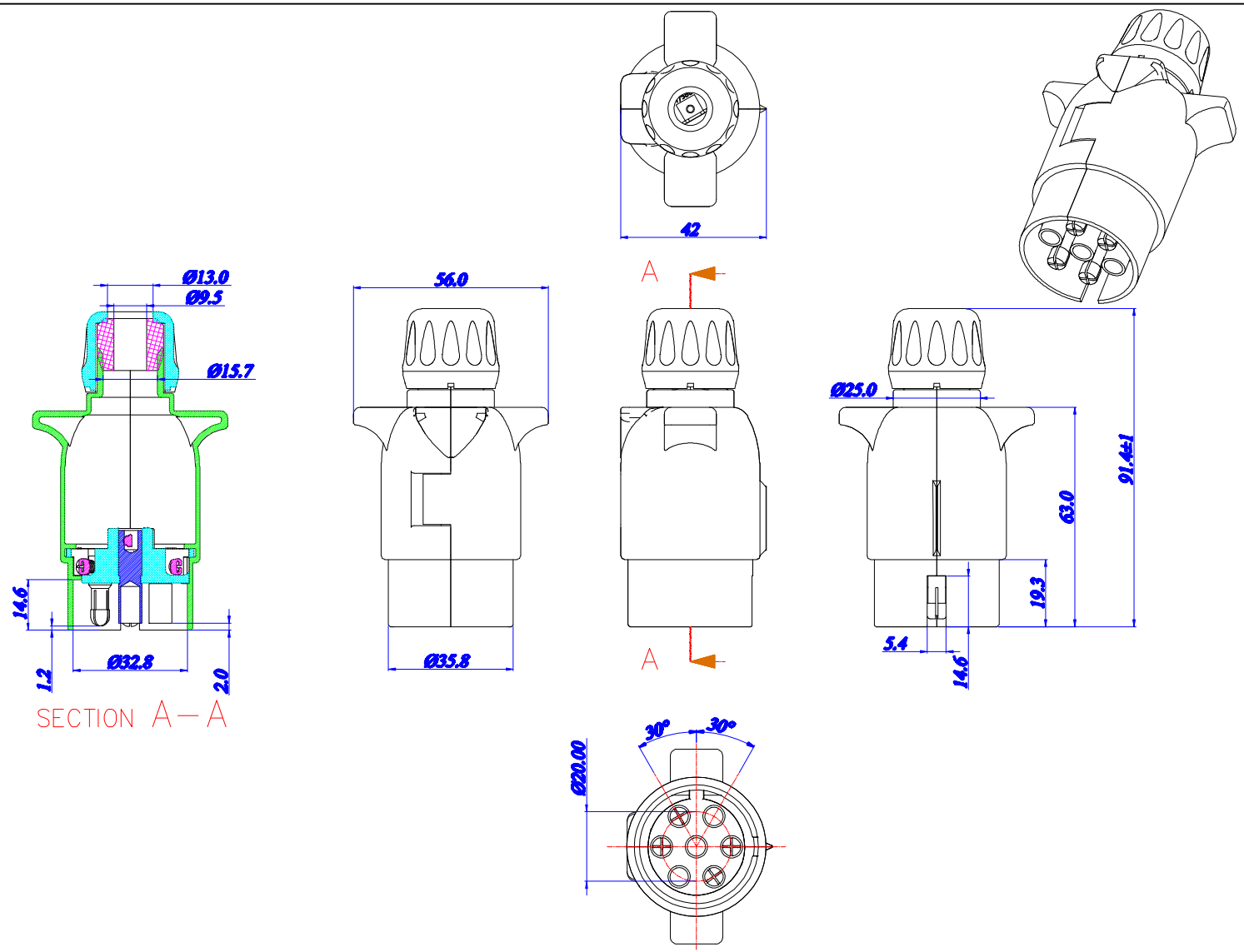

NOTE: THE PARTS ARE ACCORDING TO ISO1724

TAG	NO.	POINTS AREA	CHANGE THE FILE NO.	NAME	DATE
DESIGN			UNLESS OTHERWISE SPECIFIED DIMENSIONS ARE IN MM FRACTIONS: ± 1/64 DECIMALS: X.XXX ±0.125 X.XX ±0.25 X.X ±0.5 ANGLES: ±1°		
THE REVIEWER					
APPROVED					

PATTERN NUMBER	B/1	QTY.	WEIGHT	SCALE
				1:1
A TOTAL OF 1 PAGE		PAGE 1		